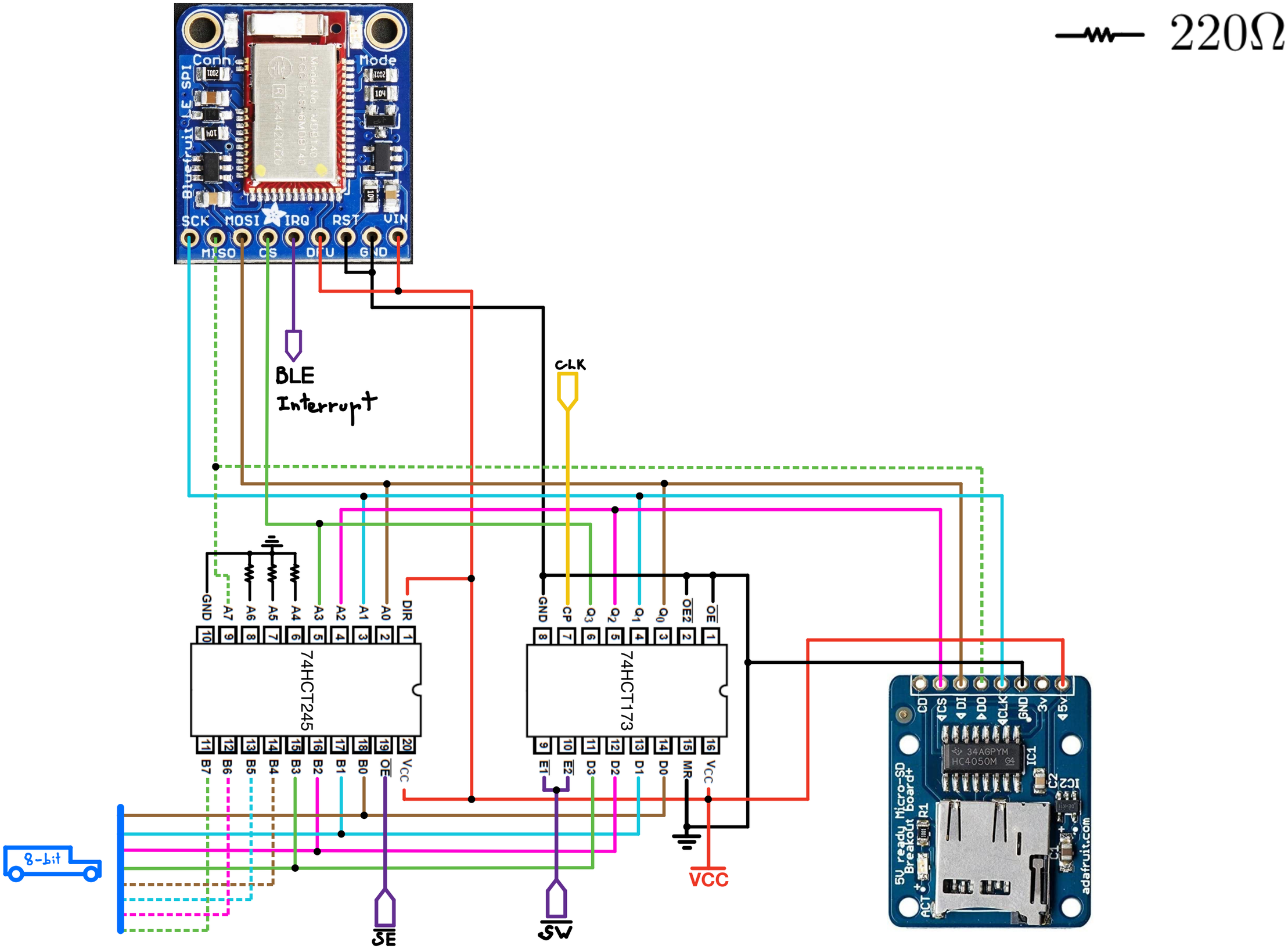
220Ω
Bluefruit LE SPI
Conn
Mode
SCK
MOSI
IRQ
RST
VIN
MISO
CS
DFU
GND
BLE
Interrupt
CLK
74HCT245
74HCT173
GND
A7
A6
A5
A4
A3
A2
A1
A0
DIR
B7
B6
B5
B4
B3
B2
B1
B0
OE
VCC
CP
Q3
Q2
Q1
Q0
OE2
OE
E1
E2
D3
D2
D1
D0
MR
VCC
8-bit
SE
SW
VCC
5V ready Micro-SD Breakout board+
adafruit.com

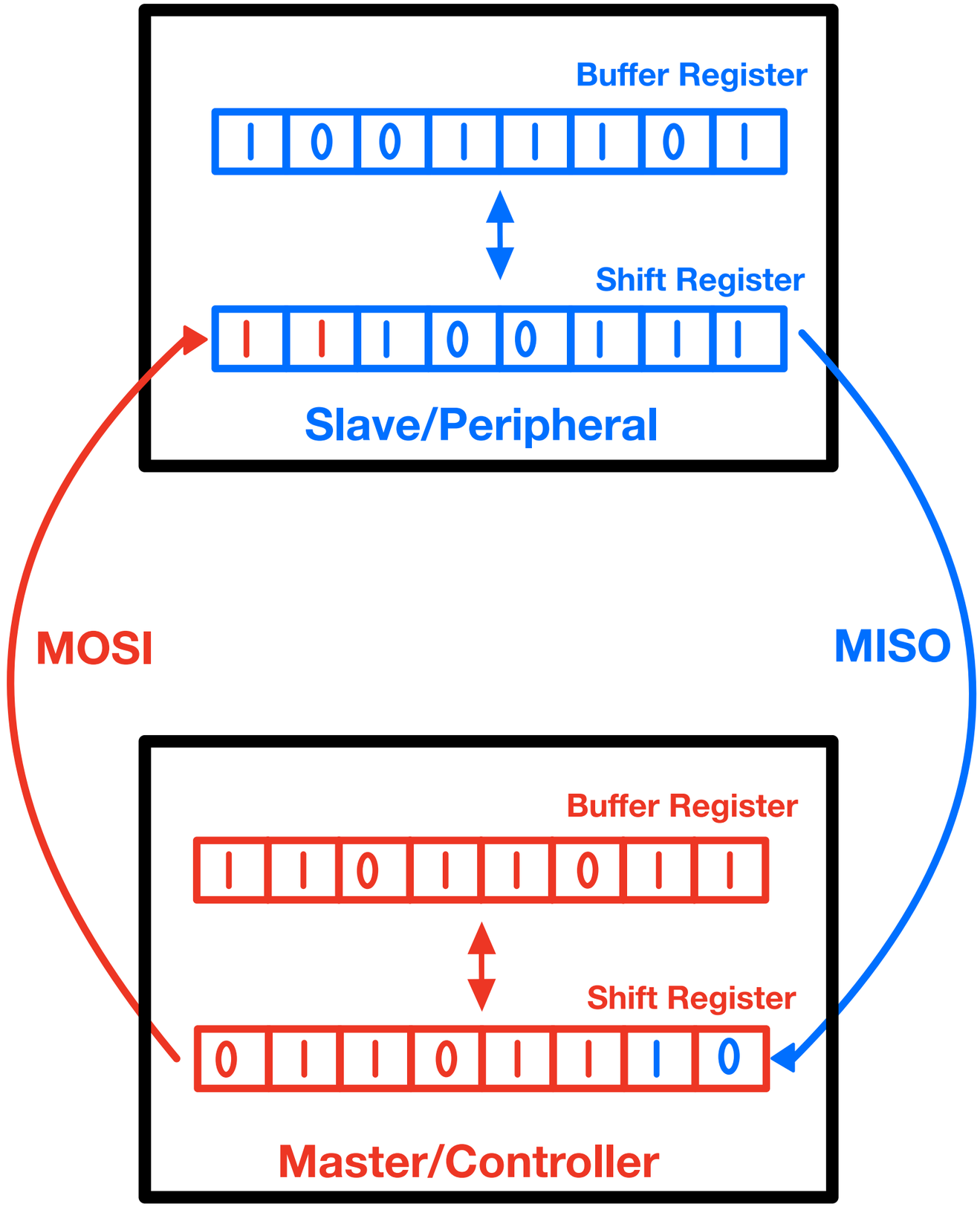
Buffer Register
1 0 0 1 1 1 0 1
Shift Register
1 1 1 0 0 1 1 1
Slave/Peripheral
MOSI
MISO
Buffer Register
1 1 0 1 1 0 1 1
Shift Register
0 1 1 0 1 1 1 0
Master/Controller